Net Metering Credits

Metered sales (kWh delivered to utility) and purchases (kWh delivered to customer) are "netted" over the billing month

- Utility charges* apply for net monthly purchases (i.e., if metered purchases > metered sales)
- A net metering credit is provided for net monthly excess kWh (i.e., if metered sales > metered purchases)

Net Metering Credit = Excess kWh x applicable tariff rates							
				Component of Service			
Class	Min	Max	Type	Default Service	Distribution	Transmission	Transition
1	0	60 kW	Agriculture, Wind, Solar	X	X	X	X
1	0	60 KW	All others	Average, loss-adjusted ISO-NE monthly clearing price			
2	> 60 KW	1,000 kW	Agriculture, Wind, Solar	X	X	X	X
3	>1,000 kW	2,000 kW	Agriculture, Wind, Solar	X	Municipal & Government only	X	X

* Customer service charges and demand charges not impacted by monthly netting. Per kWh charges apply to metered purchases (i.e., without netting) for components of service not listed in table above.

Net Metering Example 1: Monthly Purchases > Sales

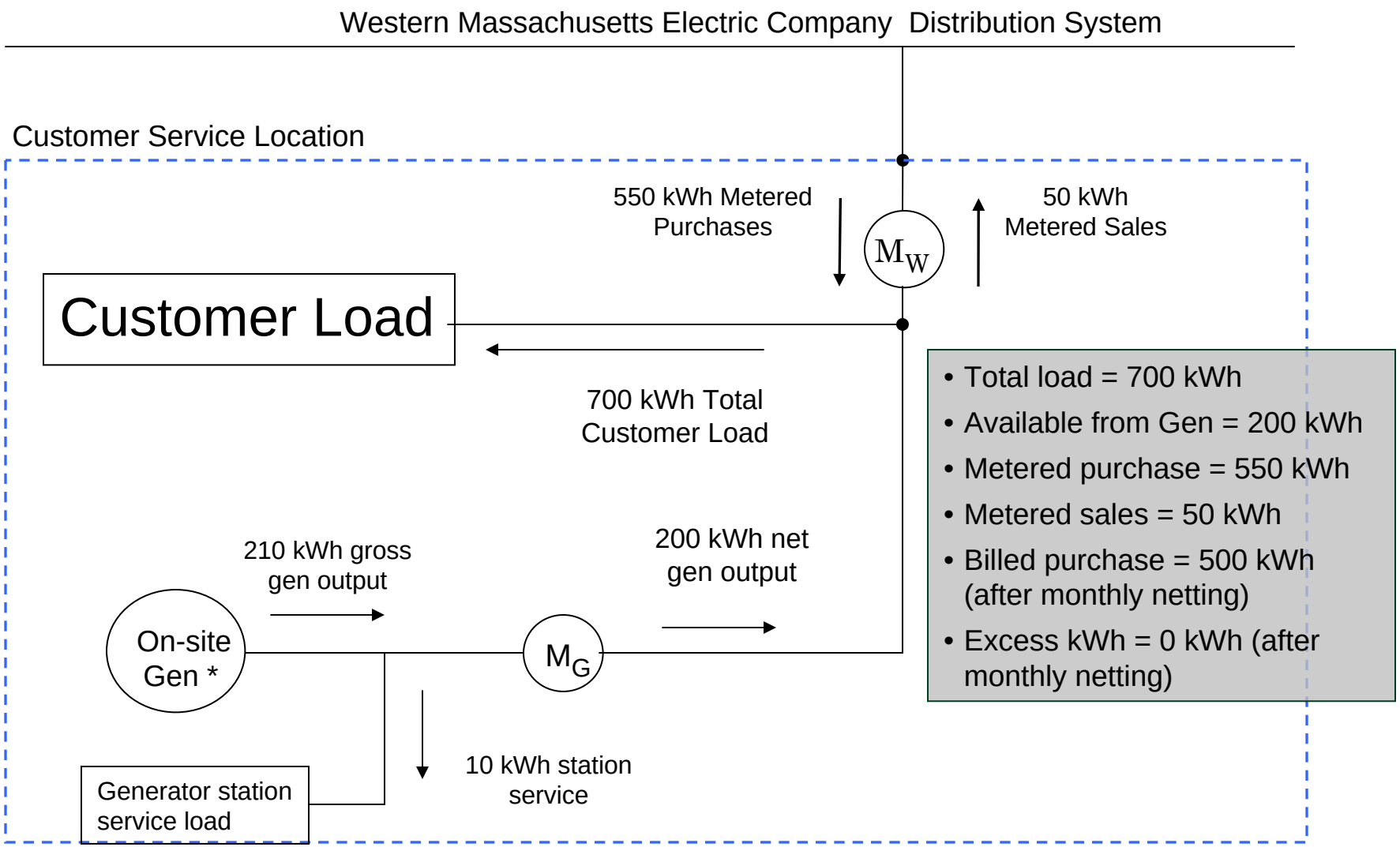

- Total load = 700 kWh
- Available from Gen = 200 kWh
- Metered purchase = 550 kWh
- Metered sales = 50 kWh
- Billed purchase = 500 kWh (after monthly netting)
- Excess kWh = 0 kWh (after monthly netting)

* 2 kW Solar (PV) Generator

Net Metering Example 2: Monthly Sales > Purchases

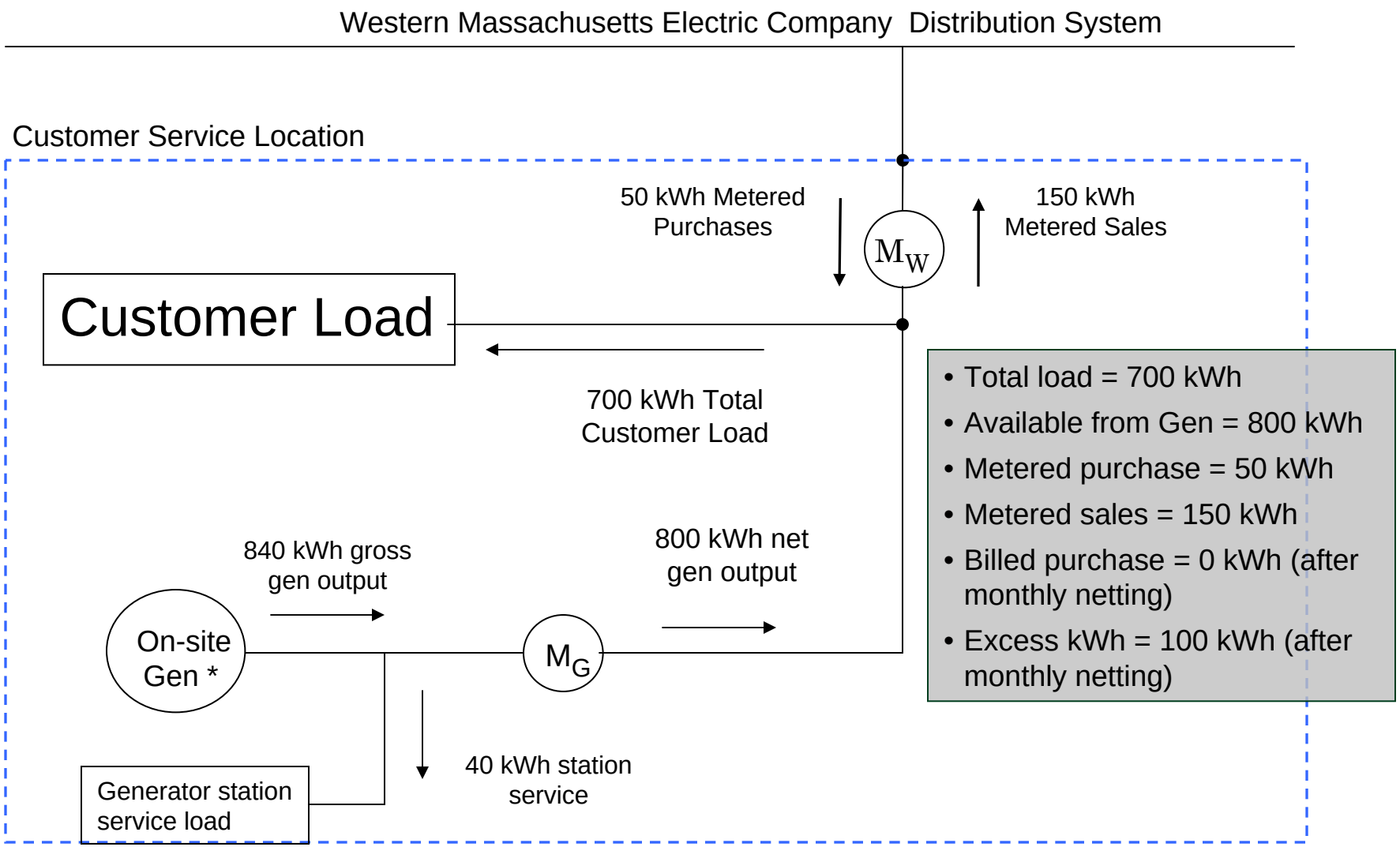

- Total load = 700 kWh
- Available from Gen = 800 kWh
- Metered purchase = 50 kWh
- Metered sales = 150 kWh
- Billed purchase = 0 kWh (after monthly netting)
- Excess kWh = 100 kWh (after monthly netting)

* 8 kW Solar (PV) Generator